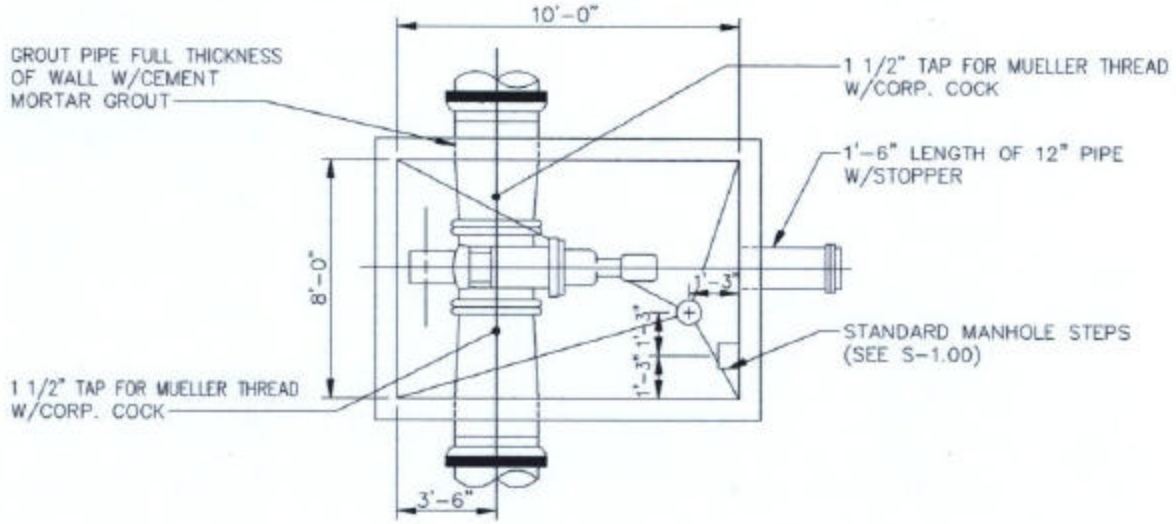

PLAN-TOP SLAB REMOVED

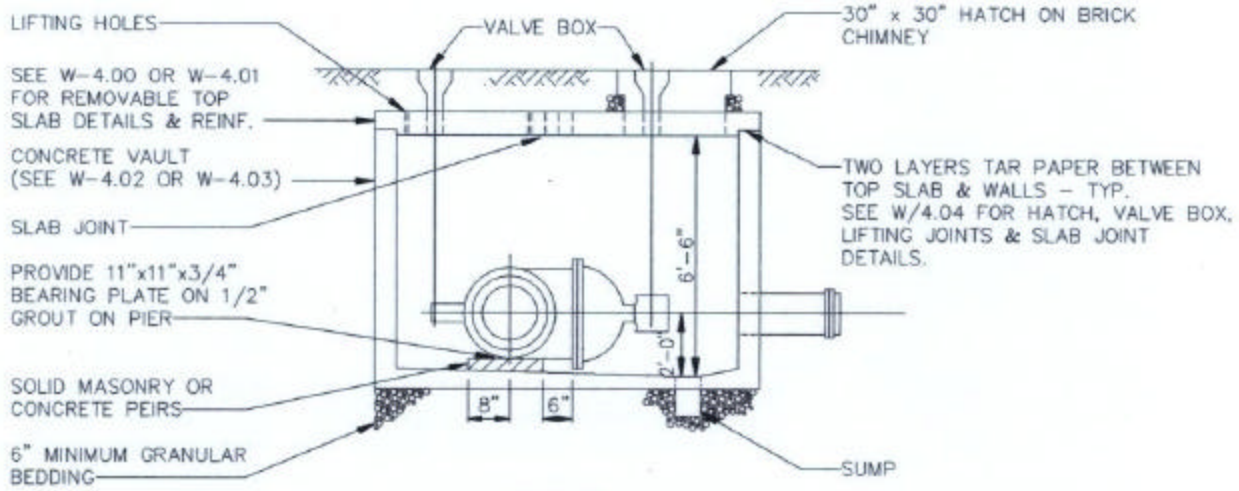

SECTION

NOTE:

VAULTS FOR ELECTRICALLY OPERATED VALVES SHALL BE BUILT WATERTIGHT. SUBMIT DETAILS FOR REVIEW.

CHARLES COUNTY GOVERNMENT DEPARTMENT OF PLANNING & GROWTH MANAGEMENT APPROVED: 6/29/95 DIRECTOR OF DEVELOPMENT SERVICES DATE 6/29/95 WATER / SEWER ENGINEER DATE	STANDARD DETAIL VALVE INSTALLATION	REVISIONS:	W / 3.03