TYPE OF HYDRANT	H (IN.)	
	MIN.	MAX.
MUELLER A-423	18	24
KENNEDY K-B1	17-1/4	23-1/4
U.S. PIPE		
WATEROUS		

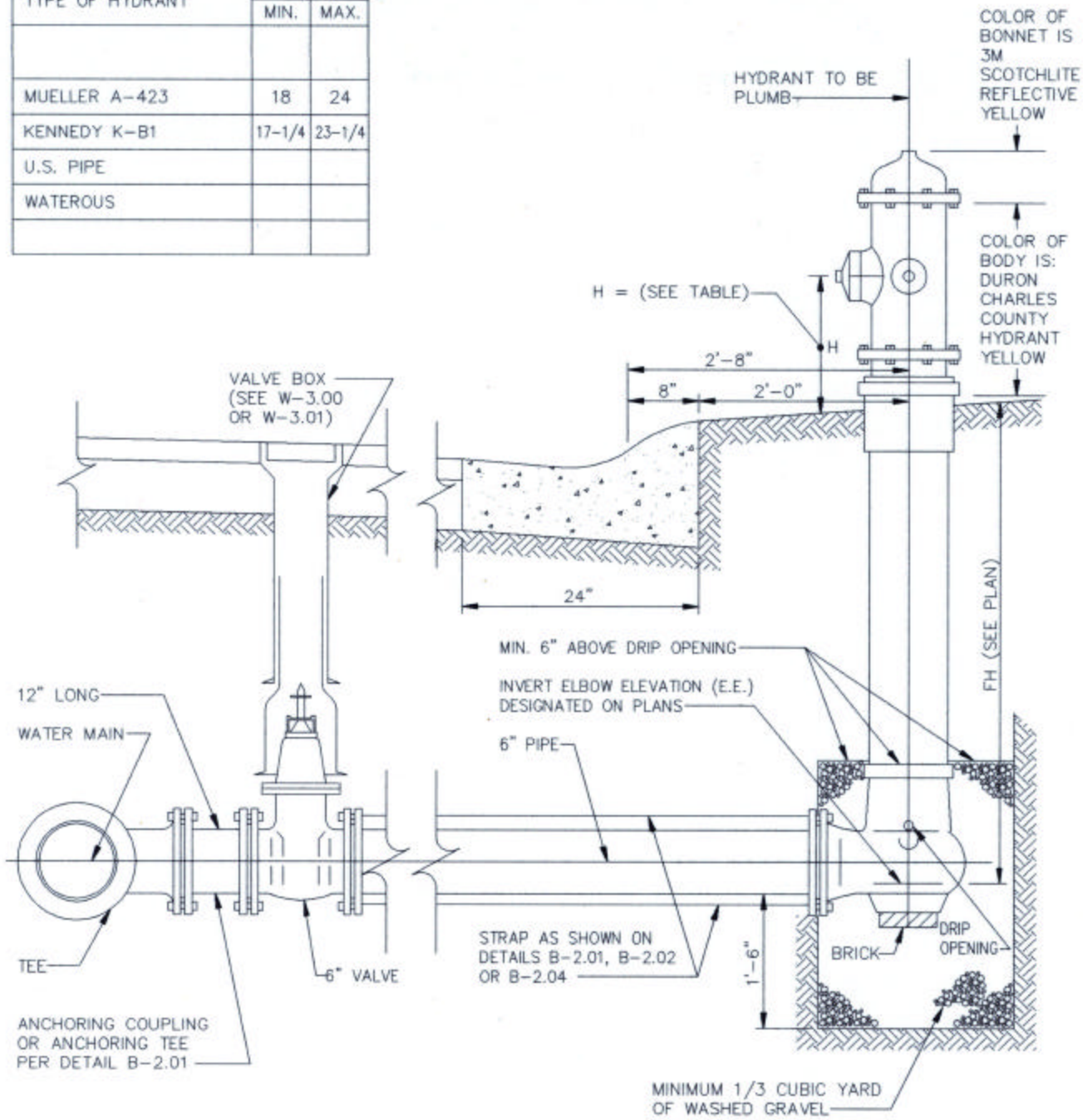

NOTES

1. ALL VALVES SHALL BE RESILENT WEDGE ONLY. APPROVED VALVES ARE: U.S. PIPE METROSEAL 250-4-16 INCH, KENNEDY KEN-SEAL II - 4 12 INCH, WATEROUS SERIES 500 - 4 12 INCH AND MUELLER SERIES A-2360 - 4 12 INCH.

2. IN RURAL AREAS, PLACE HYDRANTS 2 FEET OFF OF SHOULDER.

CHARLES COUNTY GOVERNMENT DEPARTMENT OF PLANNING & GROWTH MANAGEMENT APPROVED: 6/29/95 DIRECTOR OF DEVELOPMENT SERVICES DATE 6/29/95 WATER / SEWER ENGINEER DATE	STANDARD DETAIL FIRE HYDRANT	REVISIONS:	W 5.00